A TIME for Physics First

A TIME for Physics First

Academy for Teachers - Inquiry and Modeling Experiences for Physics First

For 9th grade science teachers

NEWSLETTER: Vol 3, No. 1, April 2009

Contents

Physics First in a Small Rural Private High School

Mrs. Lisa Best, Principal, St. Vincent de Paul High School, Perryville

Thanks to the Physics First program, St. Vincent High School students are able to have the best possible science education on the secondary level. Our science teacher, Mr. Andy Graf, has completed the intensive three-year program and we are finishing our transition to a new science rotation. Next year SVHS will teach all freshmen Physics, all sophomores Chemistry, and all juniors Biology. College bound juniors and seniors will also be able to choose as electives: honors physics, honors chemistry, honors biology, and honors anatomy/microbiology.

In the fall of 2005 Mr. Graf gave me a brochure describing A TIME for Physics First. After researching the program and reviewing state requirements for high school science, the decision was made to send Mr. Graf though the program. SVHS would transition from physical science and biology to physics-chemistry-biology. Mr. Graf was very excited about the program because he was a chemist by degree and certified in Unified Science – Chemistry. He wanted the opportunity to learn to teach physics.

In a small rural private school, resources are scarce. The physics tools and toys brought back from Columbia each year are amazing. Private donations and grants enabled SVHS to purchase classroom sets of many physics items including acceleration tracks, electricity boards, laptop computers, and a variety of Vernier probes and sensors. Science in our high school lab was looking different and fun. Science was made real and has excited students and parents alike.

This isn't to say that Mr. Graf didn't have his share of challenges. How does one cover a minimum of nine physics topics in a year using new teaching techniques of inquiry, hands-on, modeling and white boarding? There was a learning curve. His coach mentor, Glenn Owens, encouraged him. It took balance, long hours and sheer desire to successfully cover material in a timely manner. It is not unusual to see Mr. Graf in the lab early in the mornings or late in the evenings. He has set the learning bar pretty high and our students have responded. Mr. Graf collaborated with the math department, his wife Mrs. Barb Graf. He teaches basic energy, electricity and magnetism before constant motion which gives the math department time to teach Algebra I students slope and equations of lines. Students get a double dose of graphing instructions. This is a win-win situation.

The decision to change the curriculum at SVHS necessitated the review of text books. Decisions were made and teachers had the opportunity to update texts. Curriculum had to be revised. Parents, students and stakeholders needed to be informed of the decision to change. Mr. Graf is very proud of his students and other teachers during the transition to the new curriculum. SVHS is proud of Mr. Graf's willingness to spend three summers in school and attend the many weekend follow-up meetings. Mr. Graf has brought many new ideas back to the classroom to share with students. Thank you Mr. Graf! We believe in the Physics First program.

Physics First: A Story of a Transition at Westtown School*

Barry Feierman, Westtown School, Westtown, Pa

It all started in the fall of 1998 at a meeting of the Science Department at Westtown School, a Quaker, co-educational, college preparatory day and boarding school for grades pre-K – 12. As the science department gathered at our usual time of the week, chair Ted Lutkus asked us to brainstorm: "What courses would we offer if we were just now starting up a science program at Westtown School; that is, what would we teach and when would we teach it?" That's a stupid question, I thought. We've been teaching the same thing: Ecology/Biology, Chemistry, Physics for over one hundred years. Why mess with something if it ain't broke? At the time, Westtown offered a rather standard sequence of courses starting with Ecology and/or Biology in 9th grade, Chemistry in 10th or 11th grade, Biology II (AP) or Physics in 11th/12th grade and an Environmental Science (global ecology) elective for seniors.

Traditi....on, Tradition

As we thought about Ted's question, it wasn't so silly after all. The biology teachers began with these thoughts: To teach modern biology, that is, biology based on what we now know about molecular chemistry and genetics, you've really got to have a good foothold on some basic chemistry. It would be useful if students entering a biology class already had a good sense of atomic structure, nomenclature, bonding energy, acids/bases and some organic chemistry. So the biologists said that they would like their students to come into biology with a fundamental chemistry background so the biology classes would not have to backtrack and cover the fundamentals of chemistry while trying to teach biology. Some physics might help too; that is, what is energy, what is the electromagnetic spectrum, and how energy changes from one form to another. For example, a student should know enough chemistry and physics to be able to really understand photosynthesis, not just "know the right words."

Next, the chemistry teachers spoke. To understand chemistry, it would be very beneficial if students entering a chemistry class already knew about forces, energy, waves, electricity and conservation laws. After all, what holds atoms together has to do with physics, not biology. So the chemistry teachers said that physics should precede chemistry, not follow it as our "old" sequence had.

OK, so it looks like one should have chemistry before biology, and physics before chemistry. So why have we been doing our sequence Biology, Chemistry, then Physics at Westtown School for the past 100 years? Guess what? Nobody knows. It's just tradition. Really, no one at my school knows why we have this sequence. But we sense that our sequence has more to do with math than with science; students don't need to know a lot of math to do biology, and need to only know about solving basic linear and inverse equations to do chemistry, but our physics course uses trigonometry to study vectors, logarithms when computing sound levels in decibels, and even some calculus. So maybe our science sequence of biology-chemistry-physics (BCP) is just related to what mathematics our students can handle at each grade. We also know that biology used to be more descriptive and concrete, and physics was more analytical and abstract, so it made sense for younger students to study the less abstract subject at an earlier age. Biology and ecology also had the reputation of being "easier" than chemistry and physics, and enrollment declined for the 11th and 12th grade.

Next, everyone turns to me, the only physics teacher at Westtown School.

What do physics students need to know when they begin a physics course? Well, I think for a moment, and respond ..... "absolutely nothing" (that was the best I could do on the spot). But as I thought about it some more (over a weekend) I was right. You certainly don't need any biology to learn fundamental physics, and most of chemistry is not needed to understand basic physics either. Physics is really the fundamental science, dealing with the most basic of all measurements: mass, time, force, electric charge, energy, waves. So my best answer was "well, it would really help me if my students knew some calculus; then I could show them all the neat derivations of the formulas we use."

* *Reprinted with persmission from Barry Feierman.*

But that was a copout. You really don't need calculus to understand the fundamental ideas of physics, and trigonometry is even a luxury, because you can explain most vector concepts using 3x4x5 triangles instead of sine, cosine, and tangent formulas, let alone the Law of Sines and the Law of Cosines. I must admit, it was fun to use all that "advanced math" in the physics course. But then again, I only taught half of the senior class, as the "heavy math" scared away many.

My answer to the question of when could I teach fundamental physics was this:

I could teach basic physics to any age, but it would depend on how much math my students could understand. Could the students understand how to set up a proportion, solve simple equations and interpret graphs? The real question for me to grapple with was whether students who were studying Algebra I concurrently with physics could master both the algebra and the basic physics concepts at the same time. I didn't know, but I thought I could find out.

At the end of our initial conversation in 1998 Westtown School was off on a search of a new curriculum. Could we "invert" the layer cake (Biology-Chemistry-Physics) and teach what we believed to be the more logical sequence of Physics-Chemistry-Biology or PCB? Possibly, but I didn't know anything about 9th graders. Actually, I was terrified of teaching freshmen. I'd heard all these horror stories about freshmen having eight good minutes of attention per day, and I'd have to share these eight minutes with history, math, health and language. Ugh... what was I getting in to? And I rather enjoyed teaching the brighter, older seniors where we could do lots of trig and calculus as part of the physics. So, at this stage, I wasn't too excited about "inverting" the curriculum and teaching 9th graders.

The science department decided to research whether any other schools had inverted their curriculum, found a few nearby, and went visiting for a first-hand experience. In 1998 teaching physics first was still considered quite controversial. But then a New York Times article by Leon Lederman appeared. Lederman is a Nobel prize-winning physicist who suggested that physics ought to be the first course in the science sequence. That got the attention of our administration and supported our notion that teaching physics first might make more sense as part of a purposeful three-year sequence of science courses.

The Big Plunge

Westtown's science department then took the big plunge and tried to figure out what would it take to teach "physics first"; that is, physics to all 9th graders (about 100 students). We knew we'd need a few more physics teachers for sure. And we'd need a second physics laboratory for a few years, since we still needed the existing physics lab to teach physics to the remaining juniors and seniors who were already in the old BCP pipeline (about 100 older students each year). In other words, our physics population would just about double during the "transition" years, to about 200 students (half of the Upper School). And we'd need a suitable curriculum for the 9th graders. So with some planning, much effort, and some luck, Westtown introduced Physics First in the fall of 1999 to the freshmen class.

We met our new 9th grade physics classes in one of the two ecology/biology rooms, converting it into a first-class freshmen physics lab with ten computers, ten digital equipment Vernier stations, lots of sensors, and what seemed like miles of ethernet wire. It might have helped that one of the new physics teachers was our Head of School. Well, we at least found some mon-

..continued on page 4

Westtown School is a small, private, Quaker, co-educational boarding school (K-10th grade day school and boarding 9-12) located near Philadelphia. Enrollment in the Upper School is about 400 students.

Barry Feierman has been teaching high school Physics since 1970 and was a member of the High School Committee of AAPT from 2002-2005. He organized a Physics First presentation at the 2002 AAPT meeting in Philadelphia, started a Physics First website on Yahoo: www.groups.yahoo.com/group/physicsfirst/ and then began a comprehensive Physics First listserv on the American Association of Physics Teacher's website. He organized a Physics First presentation at the summer AAPT meeting in Salt Lake City 2005 featuring a wide range of speakers including some non-Physics speakers who talked about their ability to master Physics concepts. Barry helped publish the first guide to Physics First sponsored by the High School Committee of the AAPT. He is working closely with John Hubisz, Book Editor of The Physics Teacher on a comprehensive review of a dozen books suitable for a Physics First (9th grade) curriculum. This review will include the observations of over 40 experienced Physics teachers.

..continued from page 3

ey to get this lab started. We then thought about hiring more physics teachers, when one of our biology teachers and head of the department said he'd study over the summer, take some physics workshops, and learn how to teach physics. We also hired a local parent of Lower School children who majored in physics in college. So the physics department suddenly grew from one to four in a few months. Now we had a room, new equipment, and four teachers.

What to teach? We knew that we had two distinct populations of 9th graders: those who had some Algebra I in 8th grade but were repeating the course in high school, and those who had already mastered Algebra I in 8th grade and were moving on to Geometry or Algebra II. Should we offer one or two introductory physics courses? Paul Hewitt's Conceptual Physics was just what we were looking for. It was aimed at a younger high school audience, had very little intimidation in terms of mathematics, had funny hand-drawn illustrations, and most important, was really interesting to read, and I thought had excellent discussions of physics concepts.

We began our "physics first" program in the fall of 1999 with five sections of Physics I and one section of Advanced Physics I. We took the top 10% of the 9th graders (about 20 students) and for them designed a more analytical course which we called "Advanced Intro Physics." We taught this group trigonometry early on, and used Jennifer Bond Hickman's workbook for harder problem solving. We pushed the "advanced" class with more derivations and problem solving, similar to what I had been doing with the juniors/seniors in the old program.

It was awfully tough going for the regular physics students and we made a lot of mistakes. Often we aimed too high, expecting students to learn the math (especially interpreting graphs and solving non-linear equations) with the physics. Our labs were very high tech, but often my instructions shot way over their heads and some kids felt lost. I'd give us a "C-" grade for our first attempt at 9th physics in the '99-'00 school year. But we learned quickly from our mistakes, the teachers got to talk more about our goals, and we started to lecture less, and play more (something that should have been obvious). We relied more on the "inquiry" approach to doing labs, and the students enjoyed it much more.

By the second year, I'd say we were a solid "B" grade with room to improve. Very few of our students could not handle the curriculum; we had a failure rate of about 2% (two students out of 100 scoring under 60 for the year). We also tried to coordinate more with the Algebra 1 teachers and improve the way we taught both algebra and physics. We learned some new approaches to teaching graphing, designed some worksheets to emphasize "rate," and designed some simple labs where students graphed data and had to interpret the results (stretch of a spring vs. weight). We were pleasantly surprised how beneficial it became to collaborate more with the Mathematics Department.

By 2002-2003 we introduced a second-year Physics course aimed at the AP C level, concentrating on Mechanics. It began with seven students and was a lot of fun for me to teach these same students I had in freshmen physics three years earlier.

By now we had second-year courses in AP Chemistry, AP Biology, and now with AP Physics we were finding many more students wanting to take a second-year science course. By 2003-'04 the AP Physics course jumped to 10 students and from 2004 - 2007 we averaged 15 students.

Now here we are.... 2007 and beginning our eighth year of Physics First. Was it worth it? Our science department would say 'yes.' The 9th grade Physics course has met with unqualified success with our students and parents. The kids love doing the labs, and we are working closely with the Mathematics Department to learn how to support one another. The Chemistry teachers remark how much easier it is to teach chemistry concepts following Physics, since the students are very comfortable analyzing data, using spreadsheets, and have a basic understanding of the laws of physics. The junior year Biology teachers are happy with their students understanding chemistry from day one. Our enrollment in fourth year science classes has gone up by about 20% for the junior/senior year with more students taking more classes.

Hurdles to Physics First

There are many hurdles to a Physics First program. First, all in the science department might not support Physics First. If that is the case, you will need lots of ongoing discussions, school visits, library research. Find out which schools have made a successful transition and visit them. The Physics teachers themselves consider throwing out all their old lecture notes for 11/12th graders and learn how to teach a younger

student by methods more appropriate to that age. But teaching Physics First, especially if it is a required introductory course, goes a long way towards the goal of "Physics for All." We now have the opportunity to reach 100% of our high school graduates with an introductory Physics course. It may not be as mathematically rigorous as the old 11/12th grade Physics course, but it certainly covers the basic concepts.

You next must find the space to teach many more sections of Physics, especially during the transition years. At the peak, in 2000-2001 we had 11 sections of Physics where two years earlier we only had 4 or 5 sections of 11/12th grade physics. If you don't have enough equipment you might have to "stagger" the topics, and we did just that. We taught mechanics to freshmen in one lab while we taught optics and waves to juniors/seniors in another lab. By the end of the year, everyone had all the topics, but in different orders. That was our compromise. It was different for me to teach a different order of topics, but it showed us new possibilities. One need not teach mechanics before waves.

You are going to have to find more qualified Physics teachers. What do you do during the "transition period" in any school, where you are introducing a new Physics course to 9th graders, while still teaching the "old" Physics course to juniors and seniors? That happened to me for three years. The transition times are tough, and there might be a year or two when no Biology at all is taught. What do you do with your Biology teachers if Biology is on hold for two years? Simple.... they become Physics teachers. Yes... and it works if your Biology teachers are willing to learn physics. Lucky for us, one of our Biology teachers took this challenge and ran with it...literally. He invented some new Physics labs that I had never seen. And after two years, he is now back to teaching junior Biology, missing all the fun Physics labs.

So a long story comes to a close. I had the pleasure of learning how to teach Physics to 9th graders, and now get the chance to write about it and guide others.

I must admit that I was bit intimidated at first ... 9th graders.... were they mature enough to handle the abstract concepts of Physics? Time will tell, but I can say after eight years is that I feel that our "experiment" is a big success. And best of all, I am now starting to "think like a ninth grader" and see Physics from a new perspective. And thanks, Ted, for making it all happen with your silly question: "Why do we teach what we are teaching?"

What Next?

Meera Chandrasekhar, U of Missouri

Do we miss all of you? You bet. You just have to watch Dorina greeting former Physics First participants at Interface to realize how much ALL of us miss you. We hope you are all having a great time - and great success - teaching Physics to freshmen. The stories you have recounted in this newsletter tells me that you are.

This past year, we submitted abstracts to several conferences. As you can see from the list on page 6, several were accepted, and presented. I had the distinction of being the *sole* representative at the NSTA national conference in New Orleans. I hope that will change in future years as travel budgets ease. Both talks were attended by several very interested folks, including one young man who missed most of my presentation on Energy, and was so upset about it that I went over it again with him (at double speed). Both presentations (on resistance and on energy) are posted on the Physics First website under Meeting Archives.

Late in November, the Program Specialist at the US Department of Education contacted Sara Torres and asked if we could speak at the National Science Foundation (NSF) Math-Science Partnership Learning Network conference. Although the conference is for projects funded by the NSF, they wanted the Department of Education to showcase two of their 500+ projects. And they chose us! Sara could not go, but Keith Murray (from our evaluation team) and I attended. We made a 20-minute presentation at a plenary session in front of about 400 people from NSF and their projects. Woo-hoo!

Just in case you are wondering why we did not print and mail this newsletter to you, we have been advised by our university president to hold off on color printing till the budget situation eases, and post newsletters online instead. Go green!

Like I said, we miss you all. We miss all the summer fun too. To lighten this withdrawal, we have submitted a new grant propsal to the NSF. We hope it will get funded - but we won't know for a while. We'll keep you posted!

The Third Year

Tonja Kearns, West Platte R-2 High School

Greetings from West Platte R-2 High School in Weston, Missouri!! As we wind up our third year of Physics First, I reflect on this extremely valuable experience with pleasure. I was one of the original 75 participants in summer 2006, and thought that three years was going to take forever. It absolutely flew by! I will always be grateful for the professional development I received as a teacher fresh out of college. I learned so much: physics content along with active pedagogy, Socratic questioning and the hands-on activities. It makes teaching so much fun for me, and the kids enjoy what they are learning as well.

Working in a small district of 600 students, implementation of Physics for freshman has probably been easier than in larger districts. Early on, many parents were skeptical that this program would be successful, fearing that students would have a hard time grasping the concepts and the associated math. For some, apprehension arose since they were used to physics taught during the junior or senior year. Over the past three years, many of those fears have subsided as their kids perform well in the class.

My principal, Stan Coulson, believes that the PLTs (professional learning teams) provided a great framework for us to collaborate and hone our teaching skills. I certainly agree. The way we were all able to sit back and reflect on how we presented information, but also look at our colleagues' presentation of the same material, was really helpful, especially as a young teacher. There is a great value in giving and receiving critiques and ultimately it makes us all better teachers.

As we all move on in our careers, we are better teachers as a result of this program. None of us can deny that fact. I personally would like to thank the whole Physics First crew that devoted a lot of blood, sweat and tears to make this an overall successful adventure. Thank you, Sarah Hill, Program Coordinator, and Sara Torres, Project Director. Your hard work did not go unnoticed. Also, a huge thanks to all of our instructors that devoted a lot of time to us all during the summer academy: Meera Chandrasekhar, Dorina Kosztin, Mani Manivannan, Gabe de la Paz, Dennis Nickelson, and Mark Volkmann. Without all of you, this would not have been possible. And to all of the participants that stuck with it. It was a great experience and I am fortunate to have had the opportunity to learn from you all. Thank you all.

Conference Presenters, Spring 2009

Interface 2009, Osage Beach

A Typical Day in Physics First, Stephanie Harman, Columbia Public Schools, Todd Campbell, Aurora HS

Using Inquiry and Modeling to Study Electrical Resistance, Meera Chandrasekhar and Dorina Kosztin, University of Missouri

Overcoming the Obstacles of Graphing in Algebra and Physics First, Heather Johnston and Kris Miller, Windsor C-1 School District

Two Dimensional and Circular Motion, Kory Kaufman, Columbia Public Schools, Andrea Jones

Energize Using Inquiry and Modeling, Gabriel de la Paz, Clayton High School, Dorina Kosztin, University of Missouri

Beyond the Probes: Importing Video and GPS Data, John Dedrick, North Kansas City School District, Sandra Letterman, Lebanon R-3 School District

NSTA Conference, New Orleans:

Using Inquiry and Modeling to Study Electrical Resistance, Meera Chandrasekhar and Dorina Kosztin, University of Missouri; Gabriel de la Paz, Clayton High School

Energize Using Inquiry and Modeling, Gabriel de la Paz, Clayton High School; Dorina Kosztin and Meera Chandrasekhar, University of Missouri, Columbia

AAPT Meeting, Chicago

Symposium on Physics Education, Early High School Physics: Building a Foundation for Understanding the Sciences, Gabriel de la Paz, Clayton

2009 MSP Learning Network Conference, Washington, DC:

MSP Program at the U.S. Department of Education, Meera Chandrasekhar and Keith Murray

Gabe goes to Chicago

Gabriel de la Paz, Clayton High School

Know what could be more fun than taking my wife Linda to Chicago for a three-day Valentine's weekend without the kids? You guessed it - attending the American Association of Physics Teachers meeting in town at the same time!

On February 15, I had the honor of presenting at a symposium on physics education at the AAPT meeting in Chicago, The Symposium on Physics Education, Early High School Physics: Building a Foundation for Understanding the Sciences. Paul Hickman organized the symposium, and the moderator was none other than Nobel Laureate, Leon Lederman.

The symposium was held in a large ballroom at the Fairmont Hotel. Truthfully, it was a little intimidating at first, when I saw the size of the screens that would show my slides. Fortunately, the data that I presented was expertly gathered and organized by Sara Torres. For my ten minutes of fame, I proudly told the crowd of about 100 about the work we've been doing in Missouri for the last three years. There were four other speakers there as well.

Ronald Kahn of Rhode Island, spoke about the Physics First initiative in his state involving five schools. They faced the same types of challenges as the A TIME program from having to win public support to teacher training to textbooks and equipment.

Marsha Rosner, a biochemist from the University of Chicago, gave an interesting talk about the nature of high school education. She argued the viewpoint that physics being taught first would lead to better understanding of the processes of science rather than memorization of facts.

Corinne Williams, Asst. Supt. for Teaching & Learning, Bremen High School District 228 in Illinois, showed some interesting research done in an Illinois school district. Incoming honors and regular students were allowed to choose between a physics-chemistry or a biology-chemistry sequence for their first two years. Her study showed that the students at both levels who opted for physics first did better in their chemistry classes the second year than the group that chose the traditional sequence.

John Hubisz of North Carolina State University spoke about age-appropriate physics textbooks. I'm admittedly not a big fan of texts driving a curriculum, but one of John's interesting points was that a grassroots type of movement for training teachers could only reach so far at a very slow pace, but a really great textbook could provide ideas and material for thousands of teachers and have a quick and far-reaching impact.

A question and answer session followed the presentations. For me, the questions were mostly about lab equipment and textbooks. Several people stayed to chat a while after the symposium was over. It felt like the atmosphere was very positive. Overall, that was not a horrible way to celebrate Valentine's day.

The AAPT has posted an audio podcast of this seminar at http://www.aapt.org/Events/podcasts.cfm

Praxis Kudos!

The following Physics First participants took the Physics Praxis exam and passed. Congratulations!

(If your name should here but isn't, please contact Sarah Hill - the next issue will carry an update)

Amy Scroggins, Carthage Junior High School, Carthage

Stephanie Harman, Rock Bridge High School, Columbia

Kristin Pierce, Oakville Senior High, Mehlville High School St. Louis

Michael Hallock, Mark Twain High School, Center

C. Leon Krueger, West Junior High School, Columbia

John Clapp, Hickman Mills High School, Kansas City

Teaching Kids to "Think"

Kelley Kenney, Curriculum Coach, Hickman Mills

Rigor, high expectations, depth of knowledge; these are all words that really come down to one idea. Getting students to think! We have seen junior high school morph into middle school; traditional 45-50 minute class periods replaced with block scheduling, modified blocks, and "4 x 4" blocks; advisement periods added to the already packed school day; and the induction of "Professional Learning Communities." Despite all of these valiant efforts, student achievement in science education has not improved. According to "America's Lab Reports: Investigations in High School Science," between 1969 and 1999, high school student scores on the science portion of the National Assessment of Educational Progress (NAEP) have remained stagnant. There really is no wonder that these attempts to improve student achievement have not worked. If you look closely, you can see that none of these "educational reforms" deal with "what we teach and how we teach it." Only one real reform movement in high school science education directly impacts instruction in the classroom. That movement is "Physics First" which not only changes the sequence of high school science but consists of a curriculum that uses inquiry-based instruction in a relevant context.

In the Hickman Mills School District, located in Kansas City, Missouri, we began full implementation of a "Physics First" curriculum sequence in the 2007-08 school year. Using the "A TIME For Physics First" curriculum model along with CPO equipment and text, all incoming freshmen take Physics First in both of our high schools. With a significant math component in the curriculum, our two high schools saw a rise in the math scores of students that were in our initial start up classes that used the Physics First curriculum.

There have been bumps in the road as we initiated this new curriculum, but we have been able to overcome most obstacles. Last year to provide teachers with the equipment and materials necessary to run a Physics First program, we piloted with CPO to utilize their resources. This allowed our teachers the opportunity to have the materials needed for the inquiry, which is the backbone of the curriculum. Through Kauffman grant funds, we were able to purchase the resources for this school year. We now have classroom sets of (CPO) text and lab materials for each teacher.

As partners with the Columbia school district, two teachers from our district have been able to attend training on the Physics First curriculum the past three summers at the "A TIME For Physics First" institute. These teachers have returned, and using a "train the trainer model," have mentored our other Physics First teachers. John Clapp, our lead Physics First Teacher, has been instrumental in providing professional development to our teachers. Together John leads teachers as they plan their lessons with an emphasis on the utilization of science note-booking that has a focus on nonlinguistic representation, similarities and differences, along with two-column note taking.

A key instructional strategy in Physics First is the modeling of student thinking through the use of white boarding. For this next school year, this strategy embedded with Socratic Questioning, will be a primary focus in all science classrooms, grades 6-12. As teachers it is our job to "Tell the Story of Science" so students see science as a way of viewing the world rather than as a collection of facts. It is imperative that students learn science concepts and how those concepts are connected to real world experiences. It is only through these experiences that students can internalize and truly understand how science is everywhere around them - in every breath they take, in the food they eat and in all of the wonderful new technology that is now so important to our way of life.

One method that teachers can use to facilitate this type of relevant inquiry-based learning is through the questions they ask, a key component of the Physics First curriculum. As teachers we often see ourselves as the purveyors of information. I give; you take in, which means you learned. Unfortunately, learning is not an easy process. It requires the student to "THINK!" So how do we get students, or really anyone, to "THINK?" We ask questions that REQUIRE thinking, that cause the learner to make connections, to question their own assumptions, to look deeper into already held ideas; to basically reflect on their own thought processes. We

..continued on page 9

Reflections of a Three-year Coach Mentor

Glenn Owens

As a coach mentor with the A TIME for Physics First program for three years, I observed science teachers as they presented some wonderfully designed science lessons to their classes. The most rewarding part for me was to see how the teachers took these lessons and made them their own. Teachers have their own style and it is interesting to see how different teachers took the "orchestrated" lessons and arranged them to fit their classroom, students and teaching format.

Some of the teachers with whom I worked were relatively new and some were approaching the twilight of their teaching careers, but they were all influenced by the summer academy, the bounty of science equipment and the networking and camaraderie that the PF program offered.

As a science teacher, I have seen programs come and go. They generally start as the result of a grant and, all too often, they go because the grant is not renewed. The grants may offer funding for teacher training and supplies along with follow-up meetings and extensive on-line web support. The sad part is that when the funding stops, the teachers may lose contact with one another; they are isolated. Even teachers within the same district may not follow-up on some of the proven, educationally sound techniques that they have been using.

Without assigning any fault to the teachers or to the programs, it seems tragic for the system to continue with this cycle:

- Grants are written.
- Grants are funded.
- Programs are implemented.
- Programs are evaluated.
- Programs are applauded.
- Grants are not renewed.
- Equipment breaks.
- Teachers retire or transfer.
- Programs fade.

My concern is that with any educational program, the initial funding is used for training, supplies and evaluation, all of which are important, but what happens next is also important. If the program proves itself valuable, then it makes sense to continue it.

Evolution may not be taught in schools but the system itself does evolve. If we observe the effective educational development systems of other countries, we will notice that their advancement is based upon gradual evolution; a systematic change that has taken place over years and years. We should follow suit. There is some evidence that the math scores for students enrolled in the PF program have increased which indicates that the inquiry and discovery method of teaching science overlaps other disciplines. Let's not abandon this proven system. Allow it to continue. Watch it evolve for a few more years. Observe our PF teachers as they continue to enlighten and encourage students to observe, to write and to think rather than listen, memorize, and repeat what they've heard.

"THINK..."..*continued from page 8*

accomplish this staggering goal through the process of questioning. Not just any questions, but those that delve into the students' ideas and connect those ideas to new information. The Socratic Questioning method of teaching and learning can be used most effectively by teachers who plan their questions to fit the content and learning experience of the students. The "A TIME For Physics First" curriculum provides teachers with strategic questions in each learning experience. The units of study have "connecting questions" that link one concept to the next. Within those units of study are lessons that develop a concept through a series of "connecting questions" that focus on student misconceptions and require the student to build an understanding of a concept through linking ideas.

We still have a lot to do to reach the maximum potential of our Physics First program, but with the support of the "A TIME for Physics First" program and other districts who are also implementing this "thinking" curriculum we will continue to increase our students' scientific literacy. The tools we need are there, now it is up to us to use them most effectively with our students.

Brain Benders

Dorina Kosztin, University of Missouri

1. The Leaning Tower

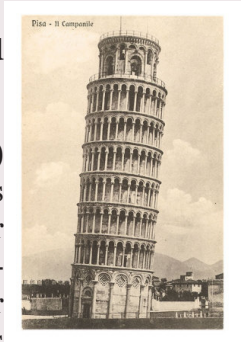

Built from 1173 to 1350. Started leaning in 1178.

It is said that Galileo (1564-1642) dropped balls of various weights from the top of the Leaning Tower of Pisa to refute an Aristotelian belief that heavier objects fall faster than lighter objects. If the balls were dropped from a height of 54 meters, how long did it take for the balls to hit the ground?

2. Flight of Fancy

A not-so-famous coach once said that "Because of the rotation of the Earth, an object can be thrown further if it is thrown to the west." Using your knowledge of vectors, determine whether this statement is an accurate description of the real world. Explain.

3. Old enough to Vote

I predict that your result will be 18:

- Think of a number.
- Add 7 to it.
- Subtract 2.
- Subtract your original number.
- Multiply by 4.
- Subtract 2.

4. What a trip!

You intend to fly around the world starting from an island with any amount of identical planes and an indefinite supply of fuel. Each of the planes can go exactly half around the world with one supply of fuel. Planes flying next to each other can exchange any amount of fuel which takes no time. Also turning around and refueling takes no time for a plane.

Given that you cannot land any plane anywhere but on the island and no plane is to be crashed, what is the minimum amount of planes that you need to take one of them around the world and return to the island?

5. Constellation Puzzle

Across

3. The Big Dipper is part of this constellation.
4. 'The Twins', its brightest stars are Castor and Pollux.
5. 'The Hunter', it is one of the most easily recognizable constellations.
6. The mythological hero who slew Medusa.
7. 'The Archer', its brightest stars form a shape that looks like a teapot.
8. Contains Polaris, the North Star.
9. The name of its brightest star, Antares, means 'the rival of Mars'.

Down

1. 'The Bull', it contains a star cluster known as the Seven Sisters, or the Pleiades.
2. The brightest stars in this constellation form an 'M' or a 'W'.
6. The winged horse belonging to 6 across.

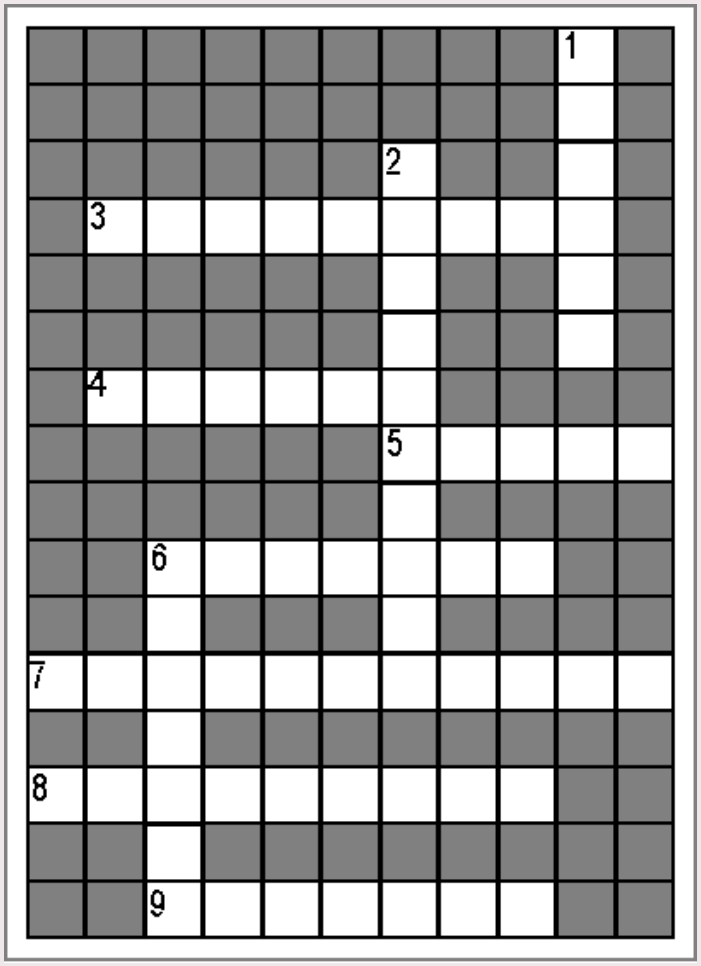

Answers to December 2008 Brain Benders

1. A Snail in a Well

A snail is at the bottom of a thirty- meter-deep well. The snail climbs up three meters in one day. During the night, the snail slides back two meters. How many days will it take the snail to reach the top of the well?

Answer: 28 days

2. Dry Shell, Wet Shell

A shell is tied to the side of a boat such that it hangs 3 meters above water level. The water rises 2 cm every hour. How much time will it take before the water touches the shell?

Answer: Never – the boat floats on water.

3. Hairy Beary

A bear walks south for one kilometer, then it walks west for one kilometer, then it walks north for one kilometer and ends up at the same point from which it started. What color was the bear?

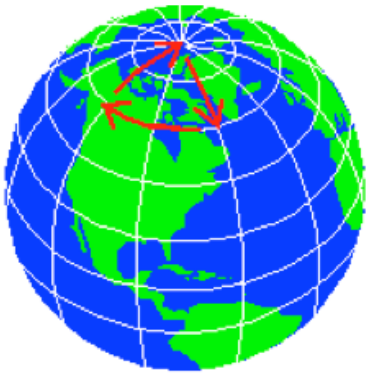

Answer: The bear was white because it was a polar bear. The only place on earth where a bear can go south, west and north equal distances and end up where it started is the North Pole.
Actually, the bear could go west two or five kilometers instead of one and it would not make any difference -- the bear would be making a circle around the North Pole. East and West you travel along parallels which are circles equidistant from the poles. North and South you travel along meridians which are circles that cross both the north and the south poles.

4. The Talented Electrician

An electrician has two two-way switches, a light bulb, and a power source. How should he connect the terminals so that either switch can be used to turn the light on or off?

Answer: Terminal D must connect to terminal I, and terminal E must connect to terminal J. D to J and E to I will also work. The light bulb and the power source must be connected in series, A to G, for example. Terminal F then connects to C and terminal B connects to H. F to H and B to C will also work. Either switch can then turn the bulb on or off.

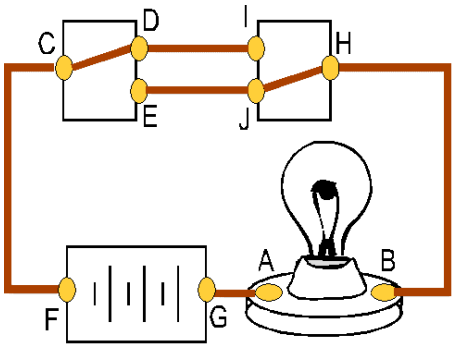

5. Burning Ship

A ship is in flames on the *high seas. All sailors, except for the captain, leave aboard life boats. The captain dives and swims under water for 90 meters. He hears an explosion. When he surfaces, he immediately hears another explosion. The captain rejoins a life boat and is pulled aboard by the sailors. The captain mentions that he heard two explosions. The sailors state that they only heard one explosion. Both captain and sailors are telling the truth. How is this possible?*

Answer: Sound travels faster in water. The captain heard the faster-traveling sound when he was under water, then heard the slower one when he surfaced.

Brain benders obtained from: http://www.pedagonet.com/brain/brainers.html and Antonio Zamora www.ScientificPsychic.com

A TIME for Physics First was funded by a Mathematics and Science Partnership grant form the Missouri Department of Elementary and Secondary Education, 2005-2008.

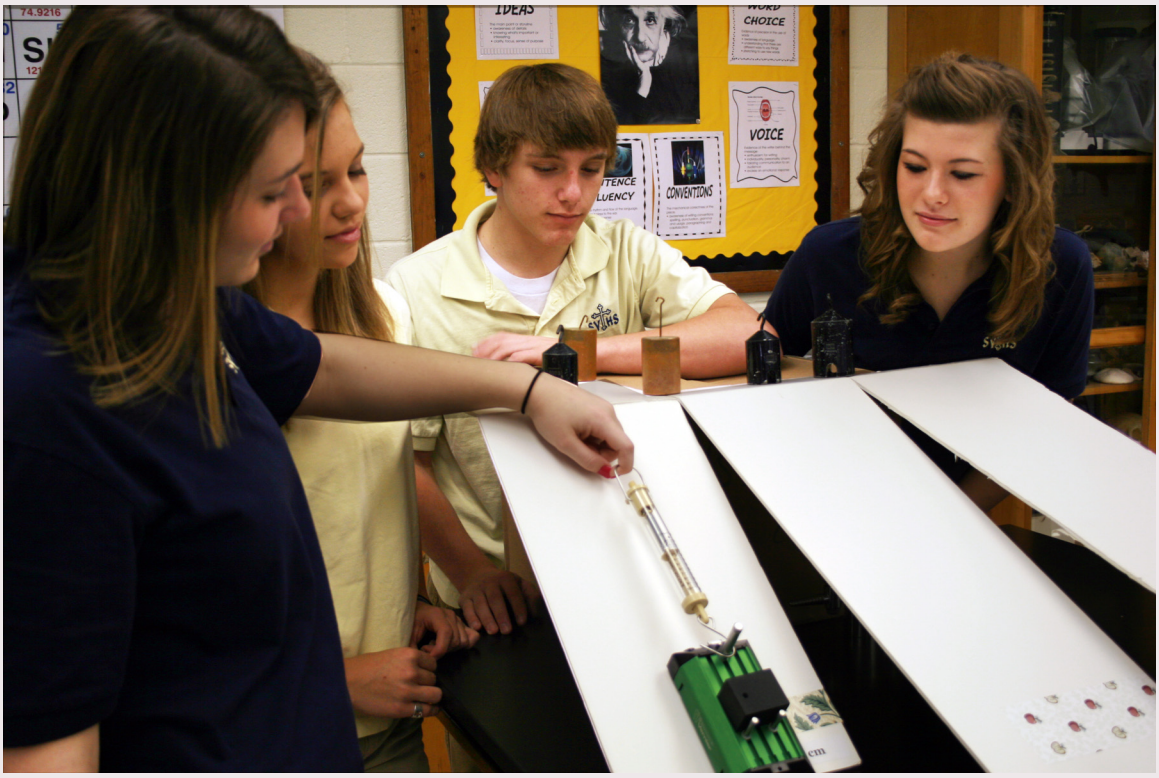

Andy Graf's students at St. Vincent de Paul High School, Perryville, Mo conduct an experiment to determine the relationship between force and work

From:
A TIME for Physics First
223 Physics Building
University of Missouri
Columbia MO 65211